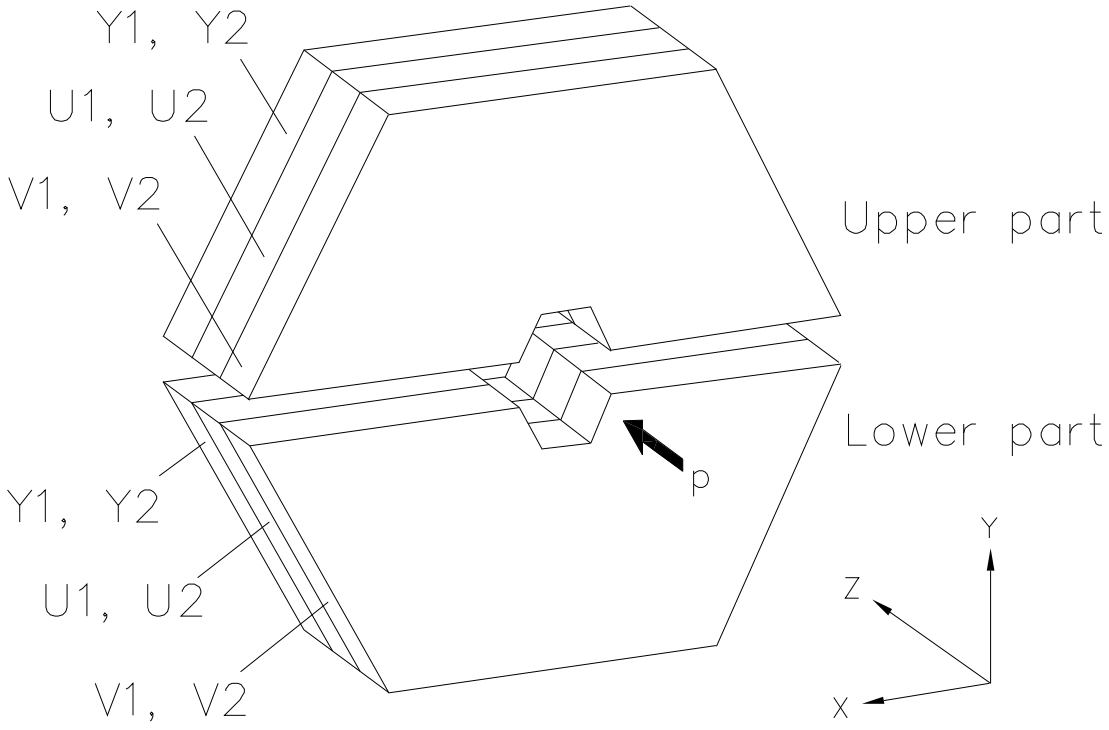

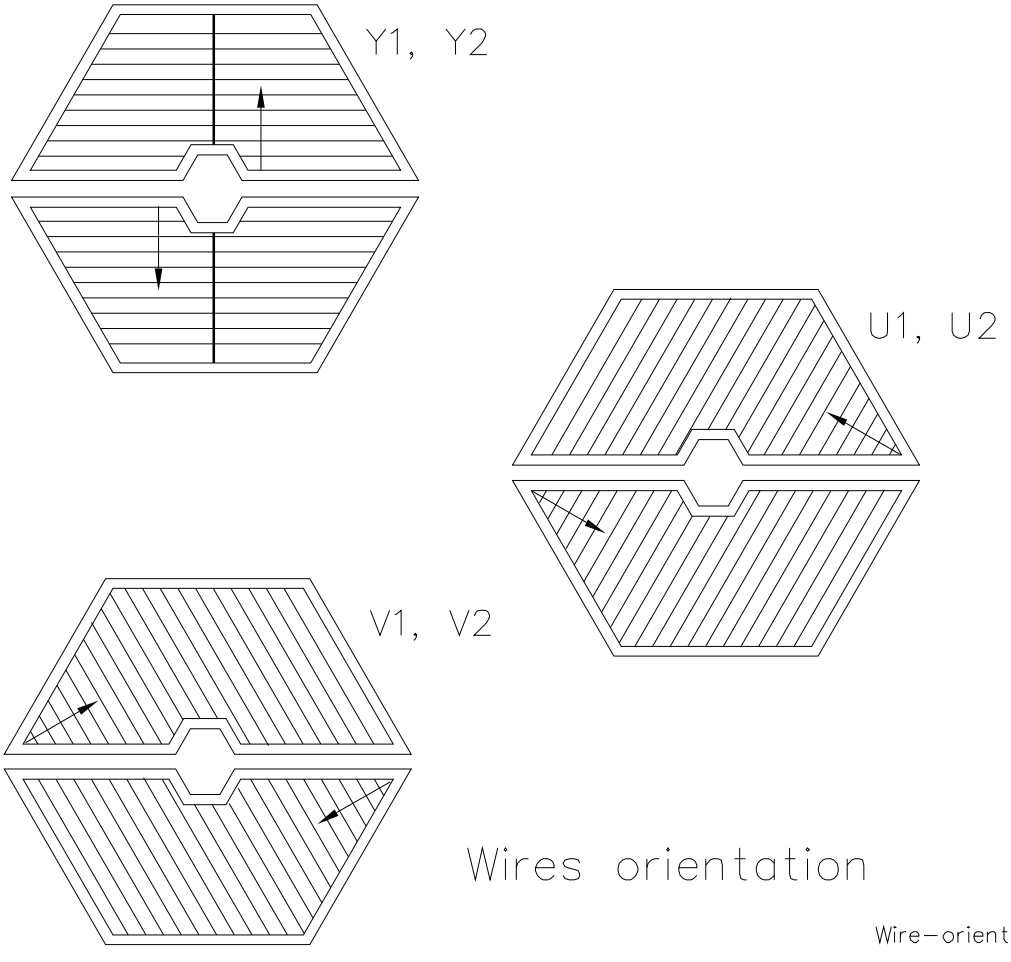

Wires orientation

Wire-orient